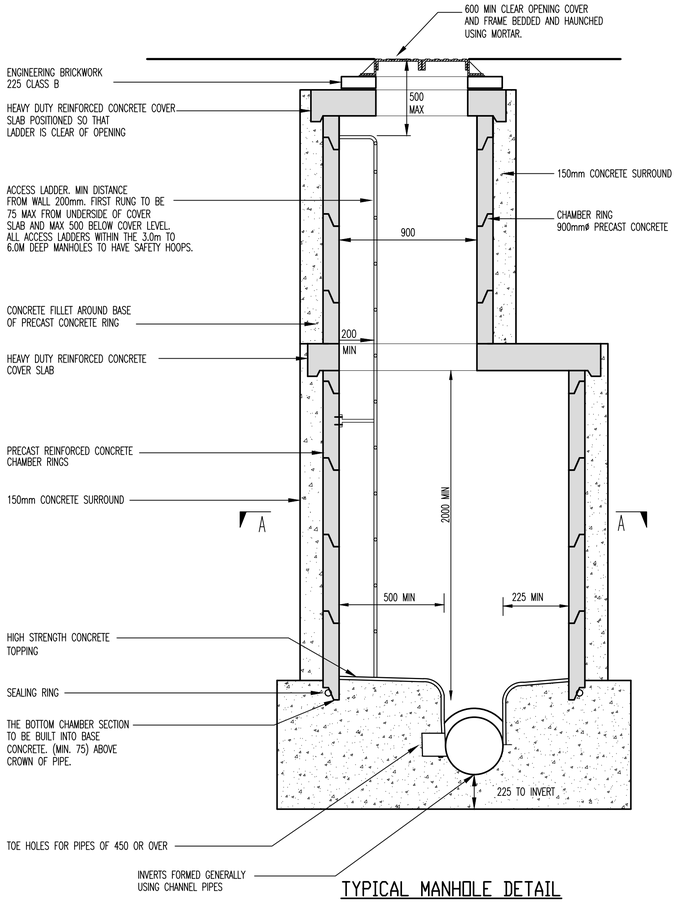

TYPICAL MANHOLE DETAIL
(3.0m TO 6.0m)

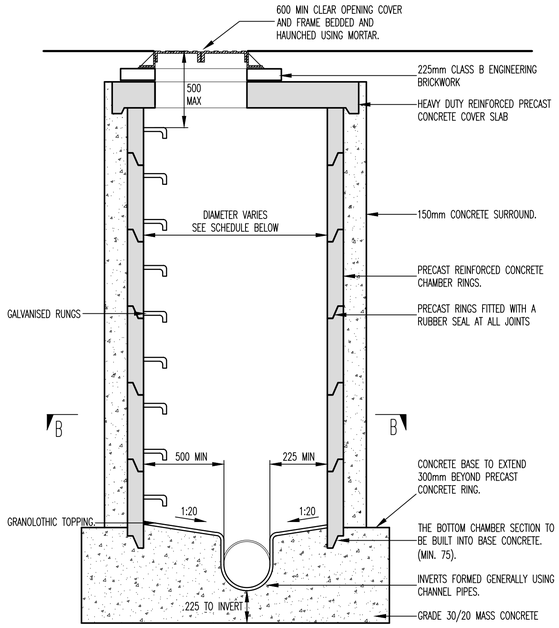

TYPICAL MANHOLE DETAIL
(UP TO 3.0m DEEP)

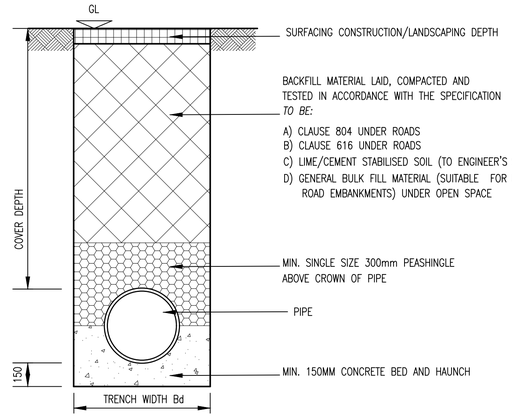

PIPE BEDDING/BACKFILL DETAIL'S

IF DEPTH OF COVER TO PIPE >1.2m UNDER ROADS
IF DEPTH OF COVER TO PIPE >0.9m UNDER OPEN SPACES

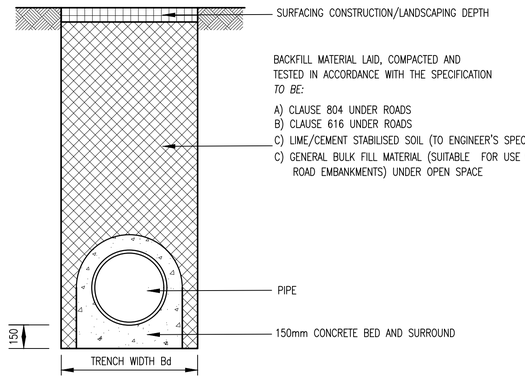

PIPE BEDDING/BACKFILL DETAIL

IF DEPTH OF COVER TO PIPE <1.2m UNDER ROADS
IF DEPTH OF COVER TO PIPE <0.9m UNDER OPEN SPACES

NOTES:

1. DO NOT SCALE. USE FIGURED DIMENSIONS ONLY.
2. THIS DRAWING IS TO BE READ IN CONJUNCTION WITH ALL OTHER RELEVANT ARCHITECTURAL AND ENGINEERING DRAWINGS.
3. TYPE A GRANULAR FILL SHALL CONSIST OF WASHED PEA GRAVEL. ALL MATERIAL SHALL PASS A 19mm B.S. TEST SIEVE AND SHALL BE RETAINED BY A 4.75mm B.S. TEST SIEVE.
4. SELECTED FILL SHALL SHALL BE FREE FROM STONES GREATER THAN 25mm IN SIZE, BUILDERS RUBBISH VEGETABLE MATTER AND LUMPS OF CLAY GREATER THAN 75mm IN SIZE AND SHALL BE COMPACTED IN 150mm LAYERS.
5. IN OPEN SPACES BACKFILL SHALL CONSIST OF SUITABLE SELECTED EXCAVATED MATERIAL. UNDER PAVED AREAS BACKFILL SHALL CONSIST OF SUITABLE APPROVED GRANULAR FILL. GENERAL BACKFILL SHALL BE COMPACTED IN LAYERS NOT EXCEEDING 300mm THICK.
6. CONCRETE BED AND SURROUND SHALL BE USED ON ALL PIPES WHERE COVER TO THE SOFFIT OF THE PIPE IS LESS THAN 1.2m IN ROADS, FOOTPATHS AND GRASS MARGINS AND 0.9m IN OPEN SPACES AND FIELDS.
7. ALL CONCRETE FOR PIPE BEDDING, HAUNCHING AND SURROUNDS SHALL BE GRADE 20N/20.
8. ALL PIPE TRENCHES / EXCAVATIONS SHALL BE BACKFILLED AND COMPACTED STRICTLY IN ACCORDANCE WITH REQUIREMENTS OF CLAUSE 505, DEPARTMENT OF THE ENVIRONMENT, SPECIFICATION FOR ROAD WORKS. FIELDS.
9. CLASS H PIPES TO BE USED ON CLASS B BEDDING WITH BEDDING FACTOR OF 1.9. APPROVAL MUST BE OBTAINED FROM THE ENGINEER FOR USE OF PIPES WITH A LOWER STRENGTH CLASS.
10. ALL MANHOLES SHALL BE WATERTIGHT TO THE SATISFACTION OF THE ENGINEER.
11. FORMWORK TO REINFORCED CONCRETE AND MASS CONCRETE SHALL BE CLASS F2.
12. CLASS U2 FINISH TO THE TOP OF SLABS. REINFORCEMENT TO SLABS TO ENGINEERS DETAILS.
13. 200mm THICK CL. 30/20 MASS CONCRETE FOUNDATIONS. 225THK. PRE CAST R.C. ROOF SLAB IN CL 30/20 CONCRETE. COVER TO STEEL TO BE 40mm.
14. TOE HOLES TO BE PROVIDED IN BENCHING OF SEWERS GREATER THAN 450mm DIAMETER FOR ACCESS TO INVERT. SAFETY CHAIN ON SEWERS 600mm. DIAM. OR GREATER MILD STEEL SAFETY CHAIN SHALL BE 10mm. NOMINAL SIZE GRADE M(H) NON CALIBRATED CHAIN, TYPE 1, COMPLYING WITH BS4942 PART 2.
15. WHEN DEPTH OF MANHOLES TO INVERT IS GREATER THAN 3.5M, LADDERS SHALL BE USED INSTEAD OF RUNGS. FIXED LADDERS SHOULD MEET THE DIMENSIONAL REQUIREMENTS OF BS4211 EXCEPT THAT STRINGERS SHOULD NOT BE LESS THAN 65 X 20mm IN SECTION AND RUNGS 25mm IN DIAMETER.
16. LADDER STRINGERS SHOULD BE ADEQUATELY SUPPORTED FROM THE MANHOLE WALL AT INTERVALS OF NOT MORE THAN 3.0m STRINGERS SHOULD BE BOLTED TO CLEATS TO FACILITATE RENEWAL.
15. ALL LADDERS, RUNGS, HANDRAILS, SAFETY CHAIN, ETC. SHALL BE HOT DIPPED GALVANISED TO BS729.

NOTE:– ALL DRAINAGE WORKS IN PUBLIC AREAS SHALL BE CONSTRUCTED STRICTLY IN ACCORDANCE WITH THE COUNCILS REQUIREMENTS FOR TAKING IN CHARGE

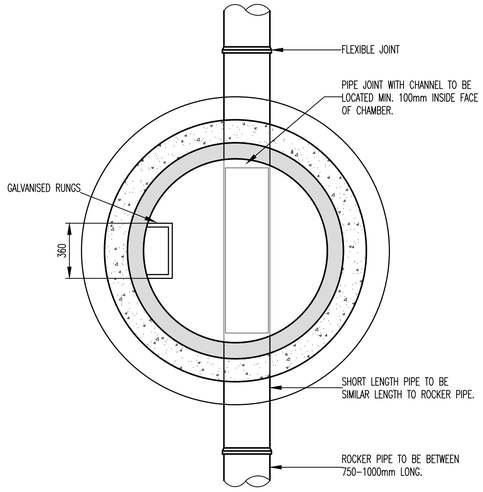

SECTION B-B

DIAMETER OF LARGEST PIPE IN MANHOLE	PRECAST CONCRETE RING SIZE
LESS THAN 375mm	1200mm DIA
375mm TO 450mm	1350mm DIA
500mm TO 700mm	1500mm DIA
750mm TO 900mm	1800mm DIA
900mm TO 1200mm	2100mm DIA

NOTE:
SIZES GIVEN IN TABLE ABOVE ON MINIMUM SIZED ASSUMING A STRAIGHT RUN AND A SINGLE CONNECTION
THESE SIZES SHOULD BE INCREASED TO SUIT MULTIPLE CONNECTIONS AND AND ASSUMED SEWER ENTRY\EXITS.

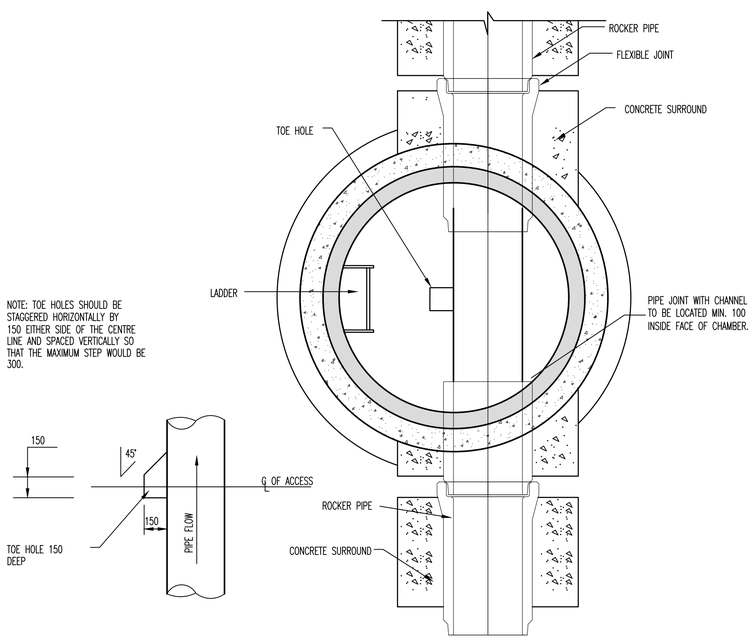

PLAN DETAIL OF TOE HOLE

SECTION A-A

INTERNAL DIAMETER (D)	WALL THICKNESS	EXTERNAL DIAMETER (De)
150	33	216
225	35	295
300	48	396
375	60	495
450	66	582
525	73	671
600	85	770
675	94	863
750	109	968
900	119	1138
1050	125	1300
1200	135	1470
1350	150	1650
1500	165	1830
1800	200	2200
2100	210	2520

INTERNAL & EXTERNAL PIPE DIAMETERS

NORMAL INTERNAL DIAMETER	MINIMUM TRENCH WIDTH mm	MAXIMUM TRENCH WIDTH mm
100	450	650
150	500	700
225	600	800
300	700	900
375	950	1150
450	1050	1250
525	1150	1350
600	1250	1450
675	1350	1550
750	1400	1600
825	1500	1700
900	1950	2150
1050	2100	2300
1200	2300	2500
ABOVE 1200	PIPE DIAMETER PLUS 800mm	OUTSIDE DIAMETER PLUS 1000mm

MAXIMUM AND MINIMUM TRENCH WIDTHS

NORMAL INTERNAL DIAMETER	PIPE CLASS	MAXIMUM COVER
100	L	7500
150	L	7500
225	L	7500
300	L	7500
375	M/H	6000/7500
450	M/H	6500/7500
525	M/H	6000/7500
600	M/H	5750/7500
675	M/H	6000/7500
750	M/H	5750/7500
825	M/H	5750/7500
900	M/H	5000/7500
1050	M/H	5250/7500
1200	M/H	5250/7500
ABOVE 1200	M/H	5250/7500

MAXIMUM COVER FOR CONCRETE PIPES ON CONCRETE BEDDING

1:20 0 0.5 1.0 1.5 2.0m
1:1 0 10 20 30 40 50 60 70 80 90 100m

REV.	DATE	AMENDMENT	DRN	APPD

STATUS **FOR PLANNING ONLY NOT FOR CONSTRUCTION**

Waterman Moylan
Engineering Consultants
BLOCK S, EASTPOINT BUSINESS PARK, ALFIE BYRNE ROAD, DUBLIN D03 H3F4 IRELAND. Tel: (01) 664 8900
Email: info@waterman-moylan.ie www.waterman-moylan.ie

CLIENT GERARD GANNON PROPERTIES

ARCHITECT CONNOLLY ARCHITECTS

PROJECT LANDS AT KILNAHUE & GOREY HILL, GOREY

TITLE TYPICAL SURFACE WATER DRAINAGE CONSTRUCTION DETAILS SHEET 1 OF 2

DRAWN	DESIGNED	APPROVED	DATE
PJD	DA	MD	MARCH 2022

SCALE	JOB NO.	DRG. NO.	REVISION
1:20 @ A1	13–119	P4210	

© 2017. This drawing is copyright. No part of this document may be re-produced or transmitted in any form or stored in any retrieval system of any nature without the written permission of the consulting engineer as copyright holder except as agreed for use on the project for which the document was originally issued.